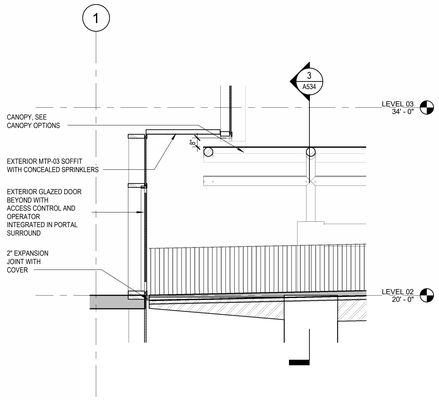

5 WALKWAY SECTION AT CITY HALL
1/4" = 1'-0"

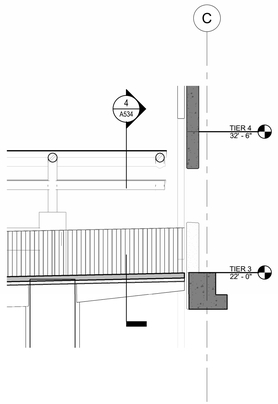

6 WALKWAY SECTION AT GARAGE
1/4" = 1'-0"

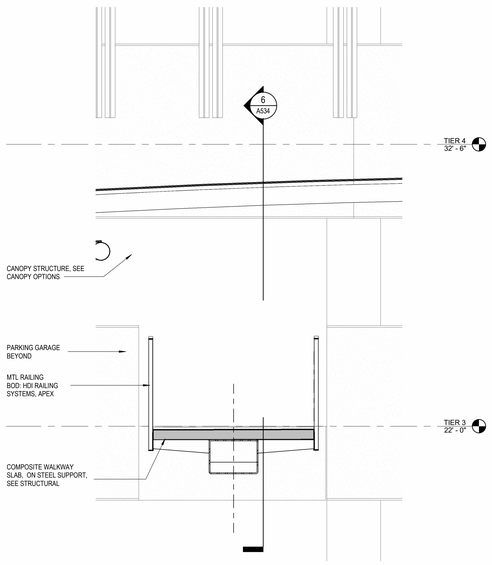

4 WALKWAY GARAGE TRANSITION
1/2" = 1'-0"

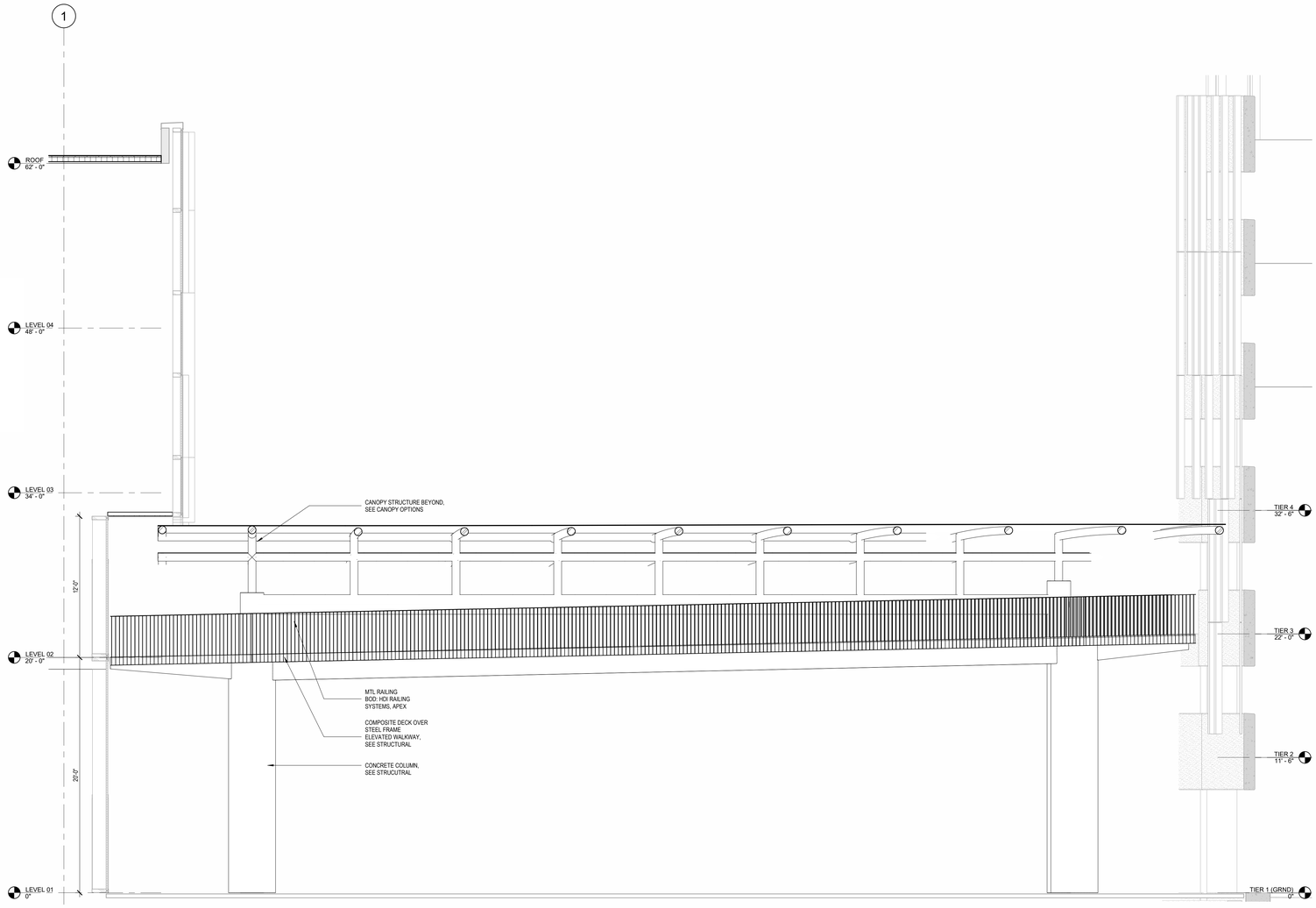

2 PEDESTRIAN WALKWAY SECTION
1/4" = 1'-0"

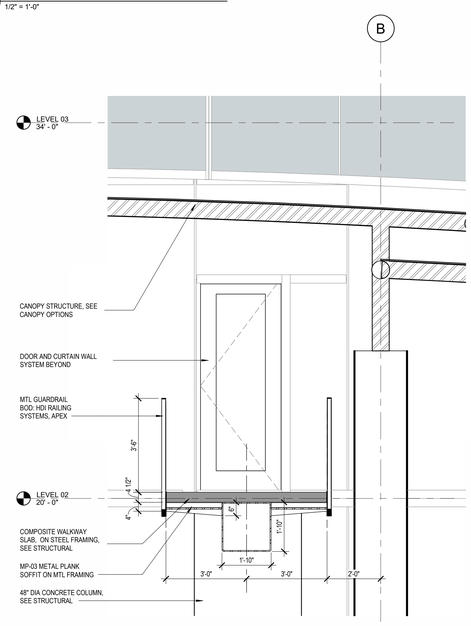

3 WALKWAY SECTION
1/2" = 1'-0"

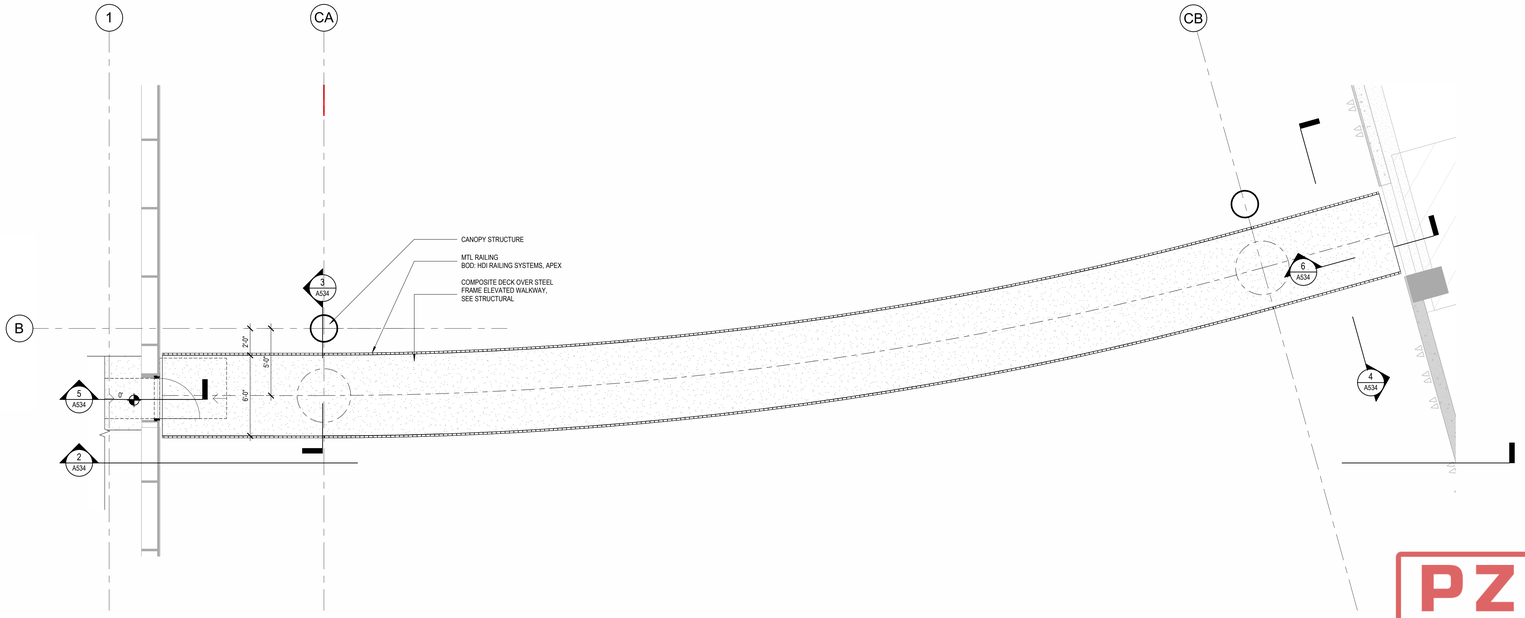

1 PEDESTRIAN WALKWAY
1/4" = 1'-0"

ROCAPOINT
PARTNERS

pompano beach
Florida's Warmest Welcome

Project

Pompano Beach City Hall & Parking Garage
125 Dixie HWY, Pompano Beach, FL 33060 USA

Client

RocaPoint Partners
309 East Paces Ferry Road
Suite 825
Atlanta, Georgia 30305

Prepared For

City Of Pompano Beach

100 West Atlantic Boulevard,
Pompano Beach, Florida 33060

Hellmuth, Obata & Kassabaum, Inc.
124 Giralda Avenue, Suite 100
Coral Gables, FL 33134 USA
t +1 786 539 0800
www.hok.com/studios/miami

Qualifying Agent, Jonathan Rae - FL Reg. No. AR92342

All reproduction & intellectual property rights reserved © 2025.

In Association with

THA Consulting, Inc.
Parking
40 NW 3rd Street, Suite 1102
Miami, FL 33128
T. 305.592.7123
www.tha-consulting.com

Hammond & Associates INC
Mechanical, Fire Protection
499 N.W. 70th AVE, Suite 215
Plantation, FL 33317
PH: 954-327-7111
www.hammondengineers.com

Kugler Ning Lighting, Inc
Lighting design
247 West 37th Street Suite 1502
New York, NY 10018
www.kuglerning.com/

SOCOTEC Life Safety, LLC
Life Safety
1349 W Peachtree St NW Suite #1010
Atlanta, GA 30309
www.socotec.us

VDA, Inc
Vertical transportation
1000 West McNab Road, Suite 209
Pompano Beach, FL 33069

Brooks Acoustics
Acoustics
49 N. Federal Highway #121
Pompano Beach, FL 33062

NOT FOR CONSTRUCTION

Professional Seal
Digitally signed by
Jonathan Rae
DN: CN=Jonathan Rae,
dnQualifier=A01410C2000D46A
0187FC9E71C2000D46A,
O=HOK Group, C=US
Date: 2026.03.10
1R:4h44-h4tXf

STATE OF FLORIDA
JONATHAN RAE
AR0092342
REGISTERED ARCHITECT

No.	Description	Date
	50% DESIGN DEVELOPMENT	01/23/2026
	100% DESIGN DEVELOPMENT	03/06/2026
	DRC SUBMISSION	03/11/2026

Project No: 24.74026.00
Date:

ENLARGED VIEWS - PEDESTRIAN WALKWAY

Original is 48 x 36. Do not scale contents of this drawing.

Sheet Number

A534

PZB
PZ26-12000002
05/27/2026

2026-03-10 5:59:36 PM